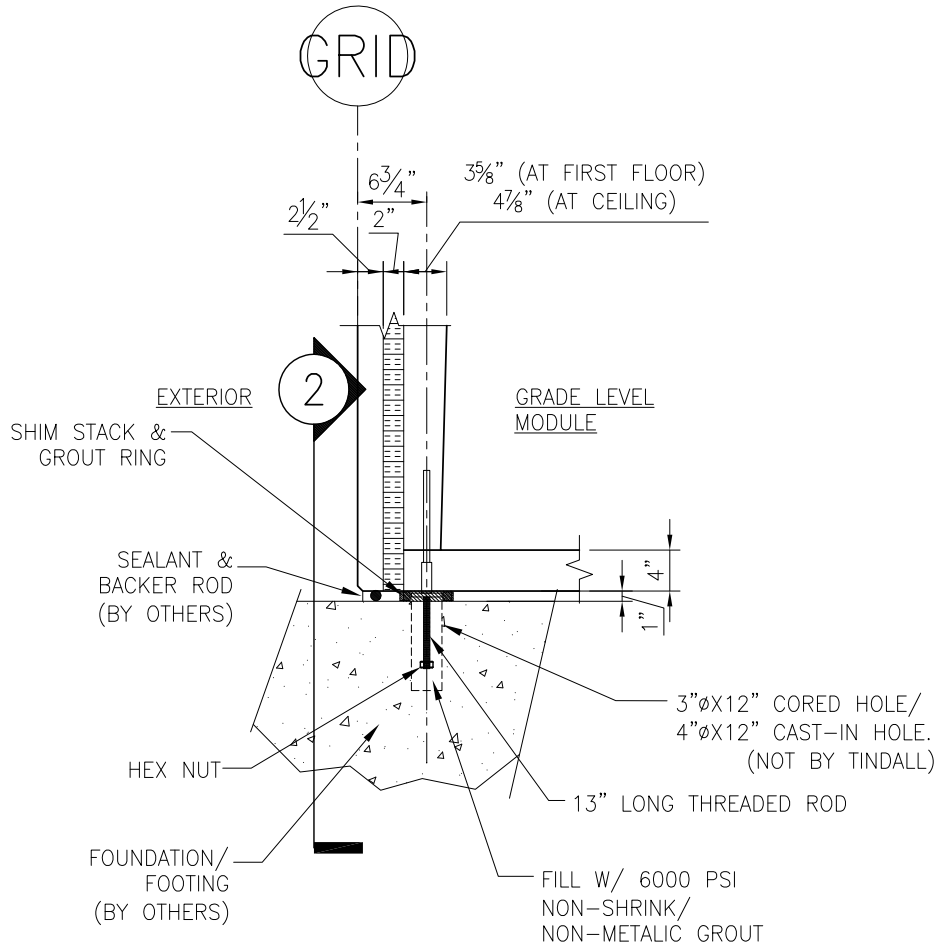

SECTION 1

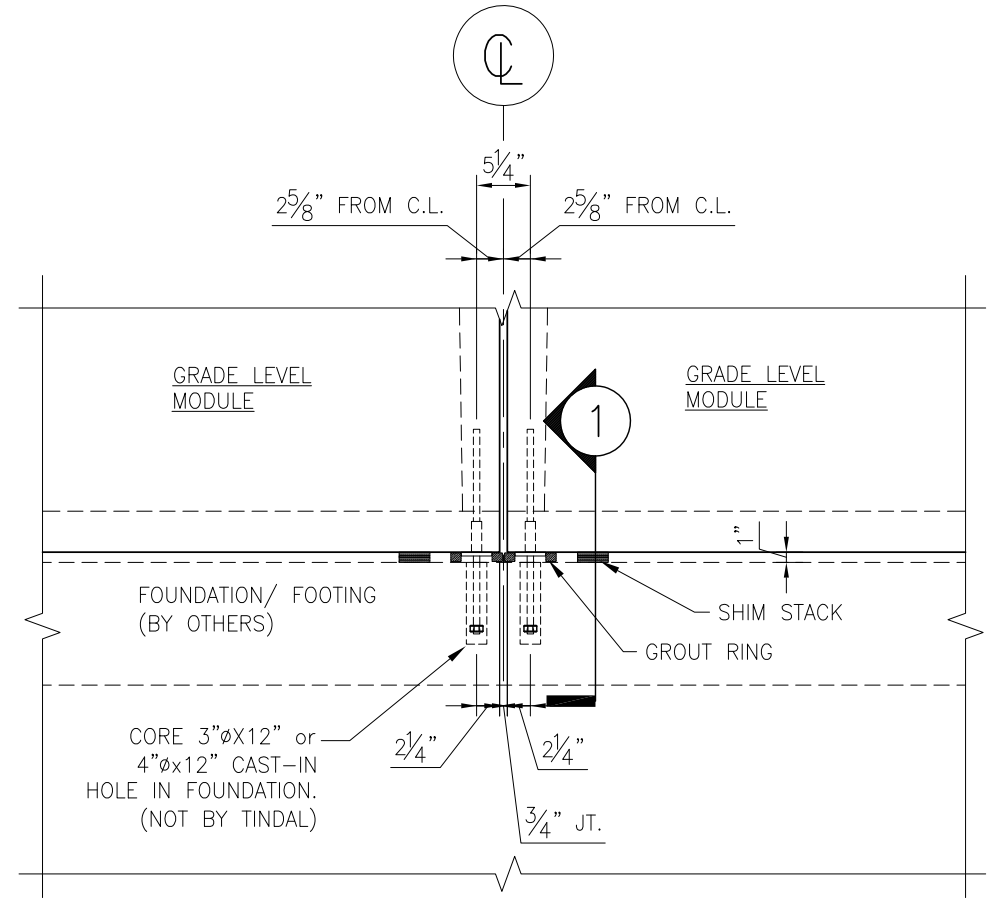

SECTION 2

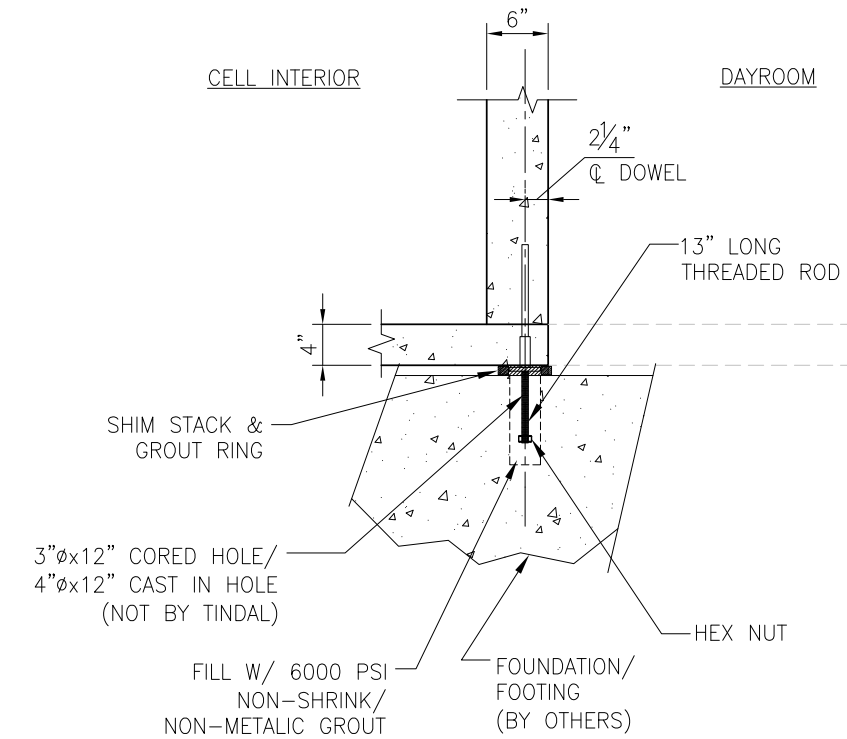

SECTION 3

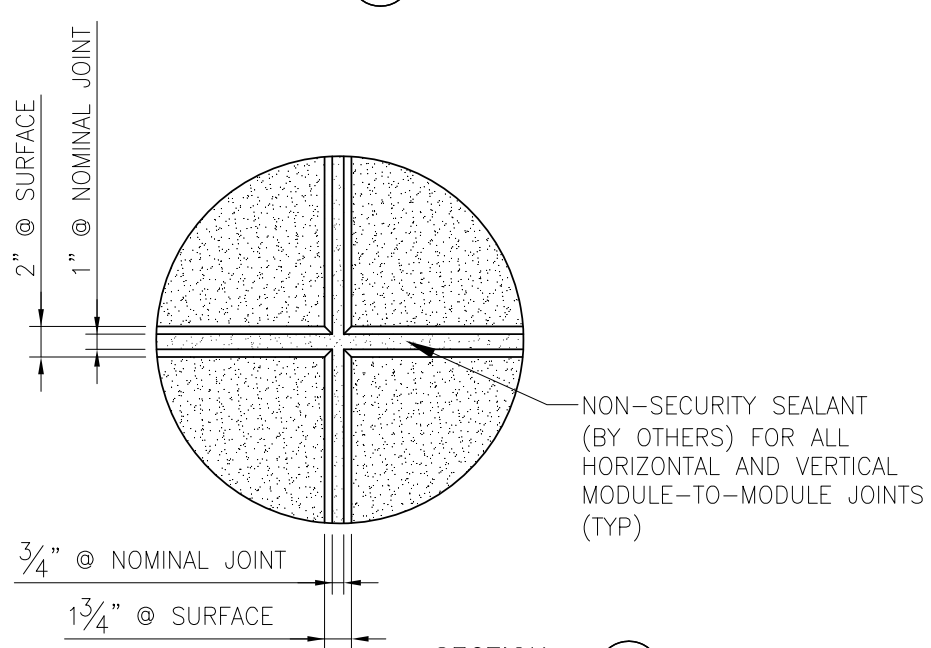

SECTION 4

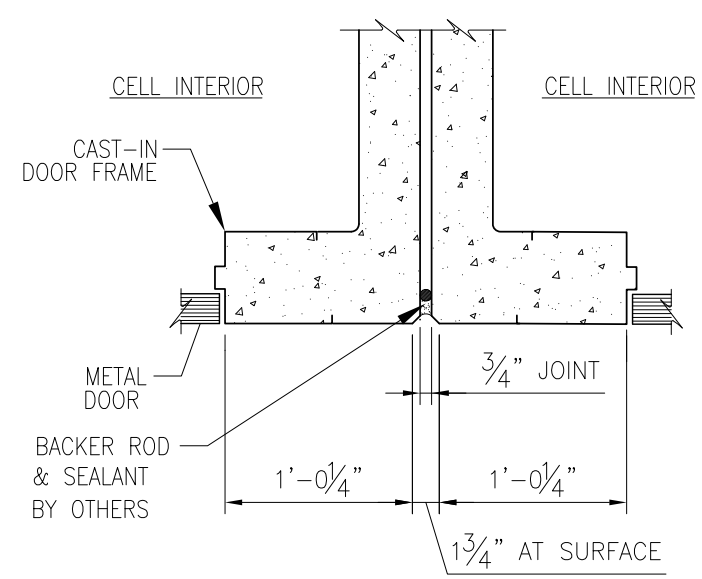

SECTION 5

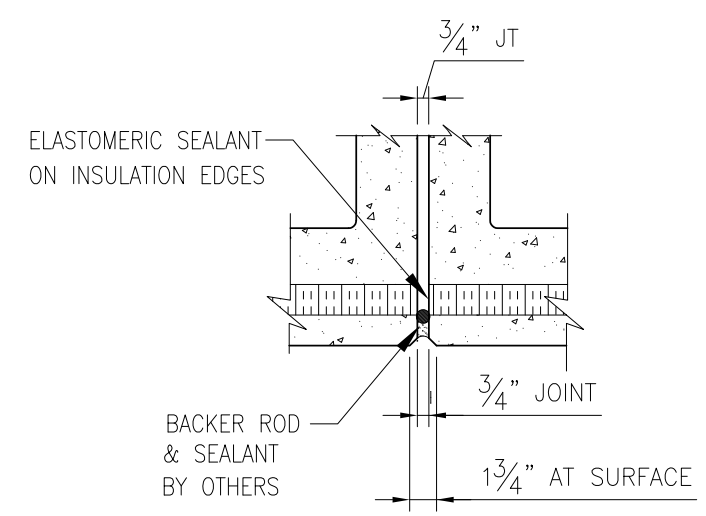

SECTION 6

PRINT RECORD

Tindall
TINDALL CORPORATION
CORRECTIONS DIVISION

GEORGIA
3361 GRANT ROAD
CONLEY, GA
30288-2133
(404)366-6270
FAX (404)366-1738

TEXAS
2222 W. MALONE AVE
SAN ANTONIO, TX
78225-2022
(210)248-2345
FAX (210)248-2180

NO.	DATE	BY	DESCRIPTION

REVISIONS

TINDALL CORPORATION

MODULE CONNECTION DETAILS AND SECTIONS

ARCHITECT:

CONTRACTOR:

DRAWN	DATE	CHK'D	DATE	SCALE	JOB NO.	SHEET
SJR	10/28/08			NTS		